REFLECTIONS
by LTL
DESIGNER LED MIRRORS

LED ILLUMINATED ALUMINIUM CABINETS

Installation Instructions

Saybrook

ELECTRICAL SAFETY INSTRUCTIONS

All connections must be installed by a licensed electrician, in accordance with current building codes. Consult a qualified electrician.

IMPORTANT

Always switch off the electrical supply at the main during installation and maintenance. It is recommended that the circuit breaker is switched off for the necessary circuit before installation commences.

Fitting in Bathrooms is subject to the appropriate building code Regulations. This product is NOT suitable for outside zones. It is also Not suitable for installation in saunas, steam rooms or shower cubicles. This product is only suitable for permanent installation. **DO NOT** connect to a trailing plug and socket outlet. This product is only suitable for indoor use. Do not attach the product to surfaces that are damp or otherwise electrically conductive.

INSTALLATION CARE & SAFETY

Wear suitable eye protection when drilling. Take care when using power tools. Beware of hidden cables or pipes. Take care if drilling on tiled surfaces in case the drill slips. A piece of masking tape applied to the wall before marking out the fixing holes will stop the drill from wandering.

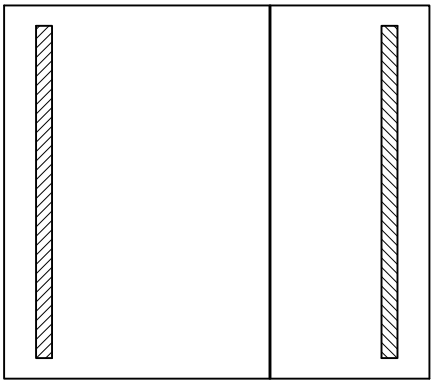

IMPORTANT

DO NOT strike glass components with hard or pointed items. DO NOT place very hot or very cold items against or in close proximity to glass surfaces unless an adequately thick insulation materal is used to prevent such items coming in contact with the glass. The nominal thickness of the mirror glass used in this product is 1/4" and is flm backed for safety. If the glass becomes chipped or broken replace immediately.

CLEANING

It is recommended that the unit is cleaned with a soft, dry, non abrasive cloth when turned off. Never use cleaning agents or abrasive materials on any type of surface finish. Do not allow moisture to come into contact with the electrical components.

LTL®

LTL HOME PRODUCTS, INC.

125 Rt. 61 Schuylkill Haven, PA 17972

1-800-360-1585 • fax 570-385-5475 • info@ltlhomeproducts.com

www.ltlhomeproducts.com

LED ILLUMINATED ALUMINIUM CABINETS

Installation Instructions

Saybrook

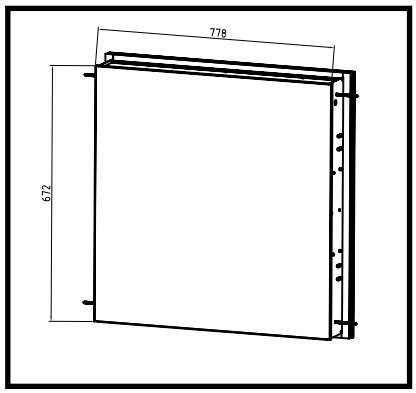

Diagram A

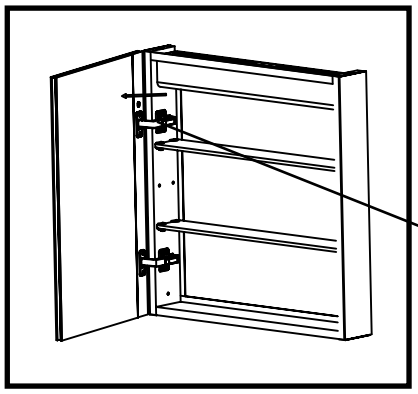

Diagram B

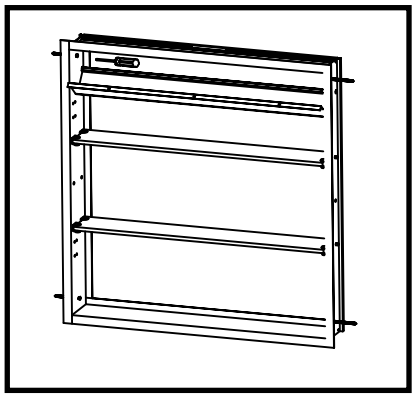

Diagram C

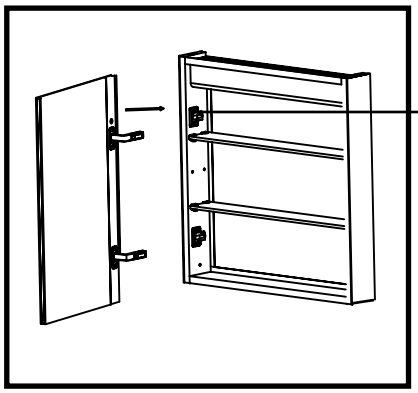

Diagram D

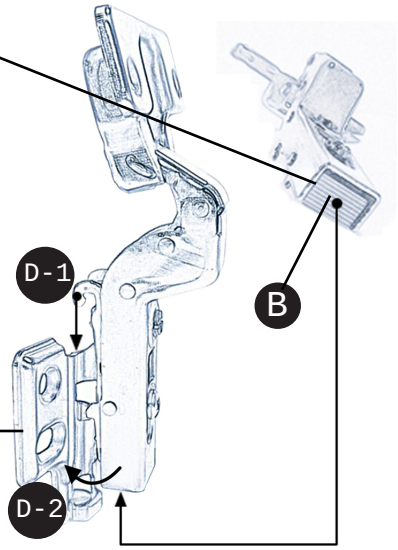

1. Remove the packaging taking special care with the doors and separate shelves. Open the cabinet doors and remove the screws on the doors. Take care not to lose the screws.

2. Measure the length,width,depth of back of cabinet for recess (see diagram A)

3. Release the hinges by pressing the bottom of hinges to remove the doors (see diagram B)

4. Open the electronic cover to fix the screws after cabinet installed on proper position. (See Diagram C)

5. Install the cabinet door after screws fixed. Make sure the hinge hook was fully inserted into the holes (see diagram D-1) Press the hinge body to be fixed with hinge base (see diagram D-2)

6. Before making any electrical connections it is necessary to turn off the main electricity supply. This unit is provided with a supply cable already fitted. This cable should be ftted to the household lighting circuit or to a fused 3 AMP supply. Connections should be made in accordance with the latest regulations. This cabinet is manufactured to CLASS 1 and requires an earth connection.

7. When the cabinet is fully secure the internal top cover should be closed and secured with the small screws removed earlier. When the cover is closed and secure restore the main power and test the function of the lights and the shaver socket. If the light fails to function properly it is likely the IR sensor has been positioned too close to an adjacent wall or reflective surface

OPERATING INSTRUCTIONS
Light can be controlled by using the 3-way rocker under the cover of cabinet inside to control warm-off-cold of lighting

LTL®
LTL HOME PRODUCTS, INC.
125 Rt. 61 Schuylkill Haven, PA 17972
1-800-360-1585 • fax 570-385-5475 • info@ltlhomeproducts.com
www.ltlhomeproducts.com

LED ILLUMINATED ALUMINIUM CABINETS

Installation Instructions

Saybrook

8 . Fitting the glass shelves. Firstly insert a shelf into the top two shelf support brackets then slide upwards so the grub screws on the underside of the support brackets (Screw **C**) can be sufficiently tightened to hold glass in place. Repeat for the bottom shelf (NOTE: be careful not to overtighten). Shelves can be positioned accordingly by sliding the supports up or down (NOTE: Take care to use both hands when sliding shelves and ensure thatsupport brackets at both ends slide simultaneously).

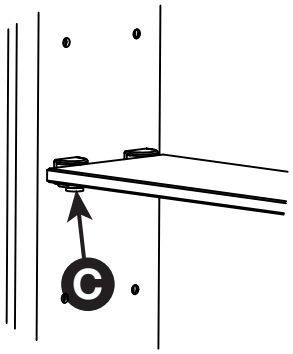

9 . If the doors are out of alignment first remove the soft-close buffer (from the relevant hinges) which clips into the main hinge plate. The soft-close hinges offer adjustment in 3 directions via adjustment screws **D** and **E** (see diagram).

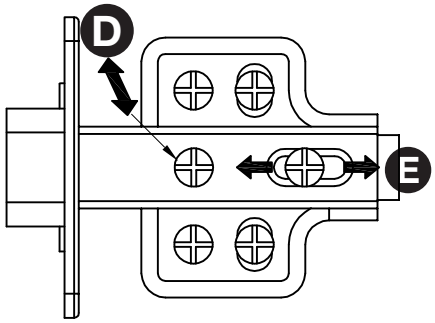

LTL®

LTL HOME PRODUCTS, INC.

125 Rt. 61 Schuylkill Haven, PA 17972

1-800-360-1585 • fax 570-385-5475 • info@ltlhomeproducts.com

www.ltlhomeproducts.com

REFLECTIONS
by LTL
DESIGNER LED MIRRORS

LED ILLUMINATED ALUMINIUM CABINETS

Installation Instructions

Installation Instructions:

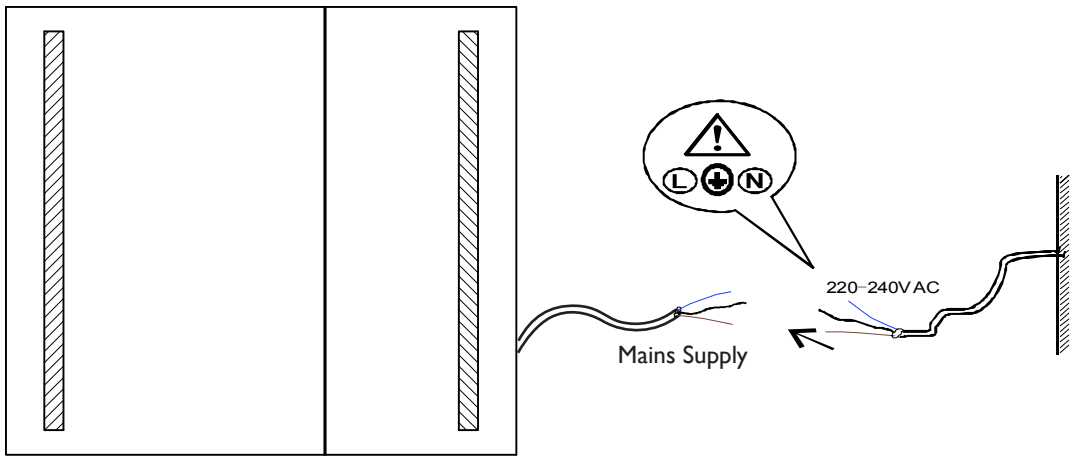

The next step is to make the electrical connection from the mirror to the mains supply. Use the connection wire found at the rear of the mirror to make the necessary connections. A second person will need to hold the mirror in place whilst electrical connections are made.

THIS PRODUCT IS MANUFACTURED TO CLASS I CATEGORY AND MUST HAVE AN EARTH CONNECTION.

COLOUR CODING: **L - Live = Black** **N - Neutral =** White ⏚ **- Earth = Green**	**Strip wires to a suitable length. DO NOT connect to a plug & socket outlet.**

! IF IN DOUBT CONSULT YOUR ELECTRICIAN !

LTL®

LTL HOME PRODUCTS, INC.

125 Rt. 61 Schuylkill Haven, PA 17972

1-800-360-1585 • fax 570-385-5475 • info@ltlhomeproducts.com

www.ltlhomeproducts.com